School of Information Technology, Engineering, Mathematics and Physics

---

CS241 – Software Design & Implementation
Semester 2, 2023
Mode: Face to Face

Short Test 1
Date: Tuesday 28 August 2023, Time: 11.00 am – 12.00 pm (FJT)

Time Allowed: 60mins
40 marks (Weight: 10%)

Student ID: _____
Student Name: _____

LEARNING OUTCOMES:

- Develop software design document
- Develop a simple software system based on the design document

INSTRUCTIONS

1) This exam has three sections:
   a) Section A: Short-answer questions (15 marks)
   b) Section B: Long answers/Software Design Artefacts (15 marks)
   c) Section C: Programming (10 marks)
2) Answer all questions in this booklet. All questions are compulsory.
3) The total number of pages including this cover sheet is 6. Extra answer sheet is also attached.

~ALL THE BEST~

Section A: Short Answer Questions *(15 Marks)*

Question 1 (10 marks)

a) The Spiral Model is a risk-driven software development methodology that combines elements of both iterative and incremental development processes. Give one strength and weakness of this model. (2 marks)

- Strengths
  - It is easy to judge how much to test
  - No distinction is made between development and maintenance
- Weaknesses
  - For large-scale software only
  - For internal (in-house) software only

OR Any further relevant Advantages or Disadvantaged, please award marks.

b) The Iterative and Incremental Model is a software development methodology that combines the concepts of iteration and incrementation to create a flexible and adaptable approach to building software. Give two strength of this method. (2 marks)

- There are multiple opportunities for checking that the software product is correct
- The robustness of the architecture can be determined early in the life cycle
- We can mitigate (resolve) risks early
- We have a working version of the software product from the start
- Variation: Deliver partial versions to smooth the introduction of the new product in the client organization

c) Pair programming is an agile software development practice where two programmers work together at a single computer. Provide two strengths of Pair Programming. (2 marks)

- All code is written by two programmers sharing a computer ("Pair programming")
- If one programmer leaves, the other is sufficiently knowledgeable to continue working with another pair programmer
- An inexperienced programmer can learn from his or her more experienced team member
- Centralized computers promote egoless programming

d) What is System modelling and why is it important for software design. (2 marks)

System modeling is the process of creating abstract representations of complex systems to better understand, analyze, design, and communicate their various aspects. It involves creating models that capture the structure, behavior, interactions, and relationships within a system. These models can be graphical, mathematical, or descriptive in nature, and they provide a means to represent different perspectives of a system.

- Describe functionality of the system.

- Use to communicate with customers.

e) The Classical Chief Programmer Team (CPT) is a concept from software engineering that refers to a hierarchical and structured approach to managing software development projects. Give two reasons why it is Impractical to have Classical CPT. (2 marks)

- The chief programmer must be a highly skilled programmer and a successful manager
- There is a shortage of highly skilled programmers
- There is a shortage of successful managers
- The qualities needed to be a highly skilled programmer are unlikely to be found in a successful manager, and vice versa
- The back-up programmer must be as good as the chief programmer
- The programming secretary does nothing but paperwork all day

Question 2 (5 marks)

a) You are a software engineer working on a project for a company that develops a mobile app. The app collects user data, including location information, to provide personalized recommendations and advertisements. However, you've discovered that the app is also secretly collecting and sharing users' location data with third-party companies without their explicit consent. Describe two issues of professional responsibility the software engineering involved in this case and What should you do in this situation? (3 marks)

- Privacy and Data Security: How should software developers handle user data to ensure privacy and security? What steps can be taken to prevent unauthorized access or data breaches?
- Accuracy and Reliability: How can software engineers ensure that their code produces accurate results and reliable performance? What steps should be taken to minimize errors that could have negative consequences?
- Transparency: Should software developers be transparent about the capabilities and limitations of their software? How can they ensure that users are informed about how their data is used?
    - How to handle
    - Understand the Situation
    - Consult Ethical Guidelines
    - Assess Legal Compliance
    - Discuss Alternatives
    - Educate the Client
    - Seek Guidance
    - Consider Escalation

b) Associations represent relationships between classes. Name the following symbols/annotations in UML. (2 marks)

Inheritance

Aggregation

Section B: Long answers/Software Design Artefacts *(15 Marks)*

Question 4 (3 mark)

Consider the diagram below and answer the questions that follows (a - c):

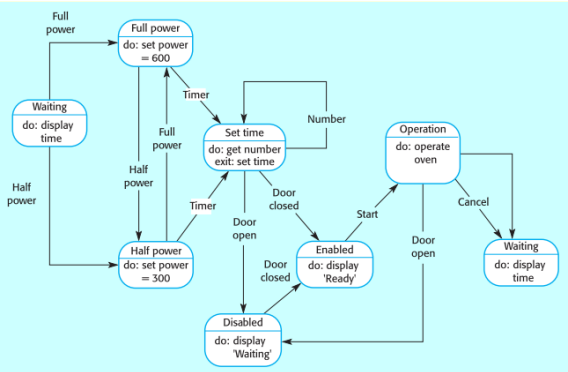

a) Name the diagram above. (1 mark)

State machine model or a finite state machine model.

b) List at least one characteristics of the identified diagram in part [a] above. (1 mark)

- A finite state machine is a system that can be in exactly one state at a time.
- OR
- The machine has to transition from one state to another in to perform
- different actions.
- The global number of the states it can be in is a finite number.
- The finite state machines are flexible.
- Easy to move from a significant abstract to a code execution.
- Low processor overhead.
- Easy determination of reachability of a state. etc.

Mark Allocation: 1 mark for any correct answer

c) Why there is no final step? (1 mark)

- the model is dependent on state, based on the state, the action is taken by the system
- Or any other relevant explanation.

Question 5 (6 mark)

The Entry of a Patient into The Emergency Room (Scenario)
One of the events of the PRSS at Suva Private Hospital is administration of patient into emergency room by receptionist.

It is recommended by the admin to thoroughly demonstrates the arrival of the patient (user) to the emergency room (environment), where they request assistance from the receptionist (user). The receptionist provides a password to the patient waiting to be called on. Upon being called on, the patient offers data for registration updates (privacy) recorded by the receptionist in the hospital system.

The receptionist checks if the patient has a health plan in Health Insurance System and then records how this service's billing issue will be managed. After this procedure, the patient will be referred to as screening.

Create a system sequence diagram for the above scenario.

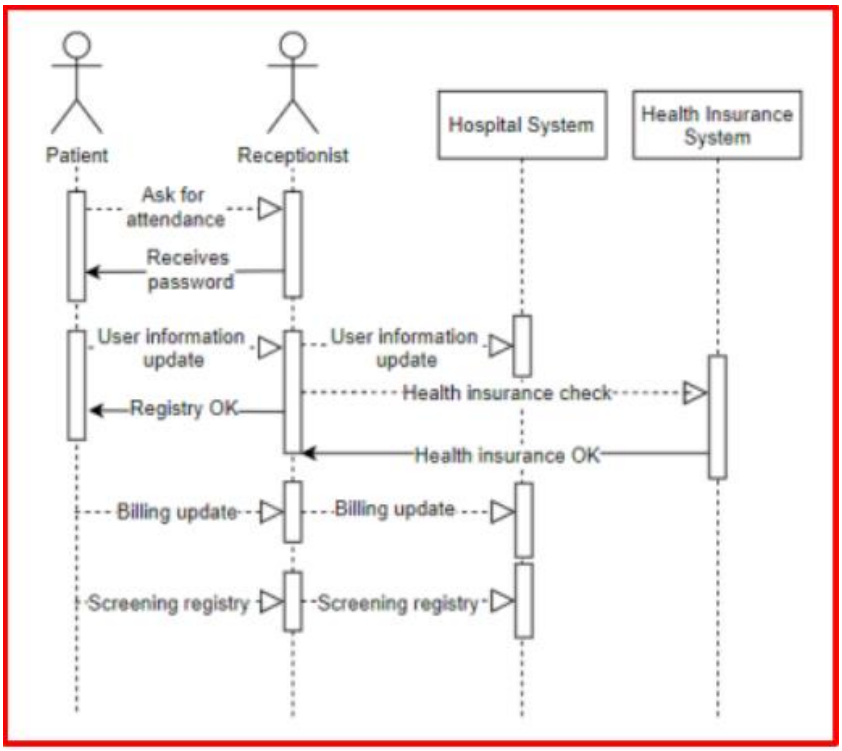

Question 6 (6 mark)

The following is an event-partitioned data flow diagram for the Email.

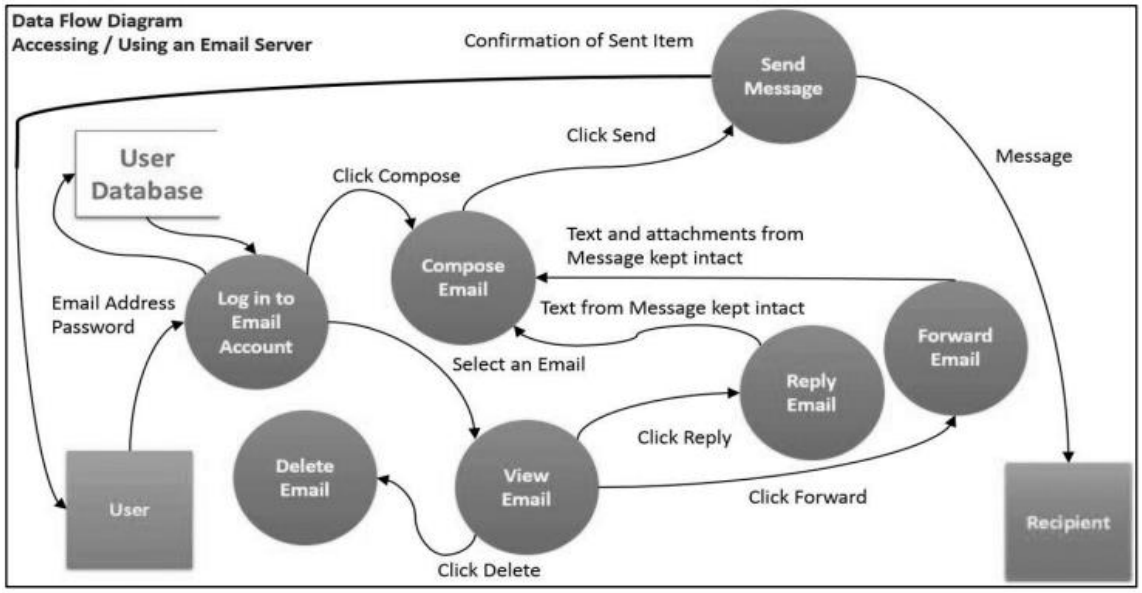

Figure 1: event-partitioned data flow diagram for the Email

Using the transaction analysis technique, develop a structure chart for it.

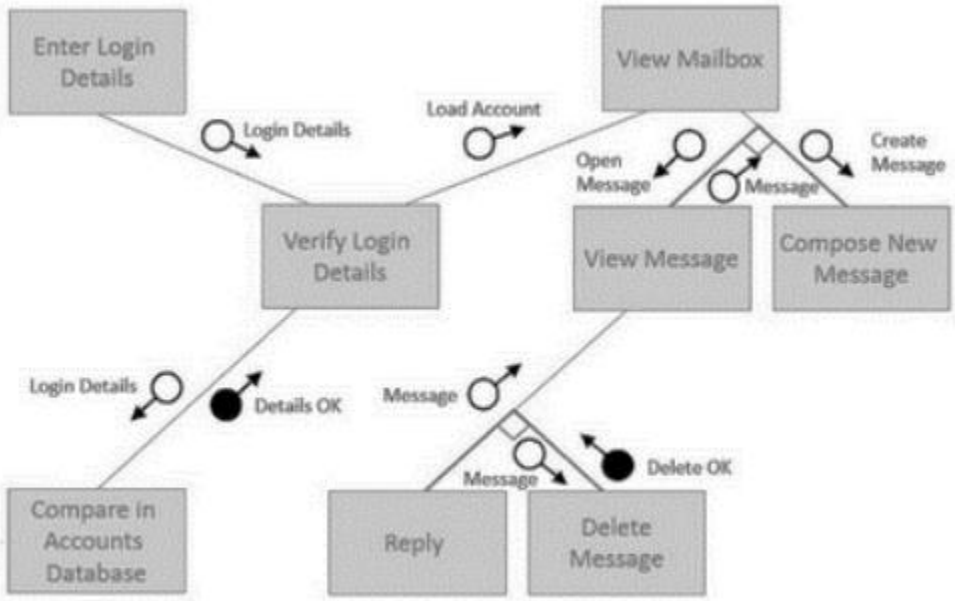

Section C: Programming *(10 Marks)*

Question 6 (7 mark)

Using the following code snippet to answer the following questions.

```
class Language {
  public void displayInfo() {
    System.out.println("Common English Language");
  }
}

class Java extends Language {
  @Override
  public void displayInfo() {
    System.out.println("Java Programming Language");
  }
}

class Main {
  public static void main(String[] args) {
    Java j1 = new Java();
    j1.displayInfo();

    Language l1 = new Language();
    l1.displayInfo();
  }
}
```

a) What is the output of the following code fragment? (2 marks)

Java Programming Language

Common English Language

1 mark for valid explanation in terms of instant or object

b) State the base and derived classes. (1 mark)
Base: Language Derived: Java

c) What does encapsulation refers to in object-oriented programming (OOP)? (2 marks)
In object-oriented programming (OOP), encapsulation refers to the bundling of data with the methods that operate on that data, or the restricting of direct access to some of an object's components

d) With example explain method overriding and method overloading in OOP. (2marks)

Overriding - during inheritance in Java, if the same method is present in both the superclass and the subclass.

Overloading - In a Java class, we can create methods with the same name if they differ in parameters.

Question 7 (3 mark)

The multi-threaded program contains two or more parts that can run concurrently, and each part can handle a different task at the same time making optimal use of the available resources specially when your computer has multiple CPUs. One way to create multi-threaded program is by Creating a Thread by Implementing a Runnable Interface as shown below:

```
class greetThread implements Runnable{
      private String greeting;
      public greetThread(String greeting){
            this.greeting = greeting;
      }
      public void run(){
            try{
                  for (int i = 1; i <= 5; i++){
                        System.out.println(i +": " + greeting);
                        Thread.sleep(500);
                  }
            }
            catch (InterruptedException e){
            e.printStackTrace();
            }
      }
}
```

Implement two threads of `greetThread` in the driver given below. Only write within the main. (3 marks)

```
public class mythread {
      public static void main(String [] args){
            // pass "Hello Program" in first threaded
            // pass "Bye Program" in second thread

            Runnable r1 = new greetThread("Hello");
            Runnable r2 = new greetThread("bye");
            Thread t1 = new Thread(r1);
            Thread t2 = new Thread(r2);
            t1.start();
            t2.start();

            // ½ mark each

      }
}
```

THE END

EXTRA ANSWER SHEET – USE ONLY WHEN NEEDED

- Mark the question number properly if used.